Design of a Wheelchair Elevator to Facilitate the Access of People with Disabilities

Course: Engineering Project

Néstor De La Rosa, Ángel De La Cruz Depaz, Jesús Quispe Agramonte

Mechanical Engineering Program

National University of Engineering

Abstract

The adequacy of access roads for people with disabilities is a problem that requires a thorough analysis and this is how the feasibility analysis is performed to detect which problem has the most feasible solution, which in this case comes to be the implementation of elevators, Taking into account the facilities of the faculty, which provided for the achievement of pleasant results through economic, environmental, structural, sensitivity, compatibility and stability studies.

INTRODUCTIÓN

Then the subject of this work arose jointly with the group, because we observed that there are people with disabilities in the faculty being students and teachers, as well as external people that our faculty could host.

In turn, the proposals that were made to choose the project to be carried out in our faculty were about 50 needs that were observed and of which we evaluated them in 10 criteria where we chose the highest score based on criteria according to the method of the pyramid Maslow inverted.

And being thus with the study realized of a series of needs and a pre-feasibility analysis, the installation of elevators was chosen as feasible solution problem and based on a series of criteria realizing a study of the same one began to realize the project per se.

At the same time, it was taken into account works carried out by the Municipality of Lima-Peru regarding the projects carried out for areas with seismic risk and problems in precarious housing conditions in areas far from our Capital.

With all this we began to carry out our project based on studies and analysis, in which the parts that compose it are:

-Project summary.
-Project objectives.
-Introduction of the project.
-Feasibility study.
- Needs Analysis
- Prefeasibility and Feasibility Study

(based on economic and environmental analyzes)
-Project Preliminary.
- Project selection.
- Mathematical modeling.
- Sensitivity analysis.
- Stability analysis.
- Compatibility analysis.

-Project Detailed.

DESCRIPTION OF THE PROBLEM

There are now many troubling indications that neither the term nor the concept of disability is fully satisfactory for describing or understanding one of the most fundamental manifestations of human essence.

These indications have to do, for example, with the poor identification that the same persons with disabilities usually show with respect to their own condition. However, this lack of identification is not exclusive to persons with disabilities, since the common people very rarely recognize that they have disabilities, whatever the type or degree of disability.

For this reason we can conclude that disability, in general, despite being an inherent condition of the human being (as will be seen below), is something that takes time to accept, because of the negative connotations that surround it. In some cases it is never accepted, despite appearances.

We must go into the causes (psychological or other) that explain this situation of denial of the condition of the disabled, if we want to help reverse the obstacles to this recognition and the resulting negative consequences. It is important to take due account of this because it affects not only persons with disabilities but also the rest of the members of society, preventing a fuller integration in all aspects of human activity.

According to the WHO (World Health Organization) it indicates that access and facilities must be available for all persons with disabilities in any public place, whether in public or private institutions.

OBJETIVES

- Provide an adequate implementation system for people with disabilities (teachers, students or external persons).
- Serve as shown the project made so that it takes place in other faculties of the national university of engineering and in different universities and places.
- Avoid accidents for the disabled.
- Improvement of implementation in construction in the faculty of mechanical engineering.

DESCRIPTION OF THE SOLUTION Y RESULTS

Due to the various analyzes that were carried out, these are the description of the solutions:

- **<u>ECONOMIC ANALYSIS</u>: Implement ramps and elevators in certain areas (COSTS)**

CONCEPT	RODE
Elevator for the Disabled	S/. 50000.00
Save stairs	S/. 20000.00
Concrete rampas	S/. 30000.00
Training	S/. 3000.00
Total Cost	S/. 103000.00
Utility(30%)	S/. 30900.00
SubTotal	S/. 133900.00
IGV (18%)	S/. 29392.68
Total	S/. 162292.68

- **<u>ENVIRONMENTALIMPACT ANALYSIS</u>**

IDENTIFICATION OF ACTIONS

PREVIOUS PHASE
Tala and unroll
Mounting of brackets and security elements

CONSTRUCTION PHASE
Dismantling and terrapien
Noises
Construction of ramps
Lift Assembly
Paving

FINISHED PHASE
Maintenance

- **<u>MATHEMATICAL MODELING</u>**

ANALYSIS OF THE STRUCTURAL SYSTEM

The structure will withstand flexural loads and the fatigue stresses developed on the structural members resemble fluctuating stresses as shown in Figure 1

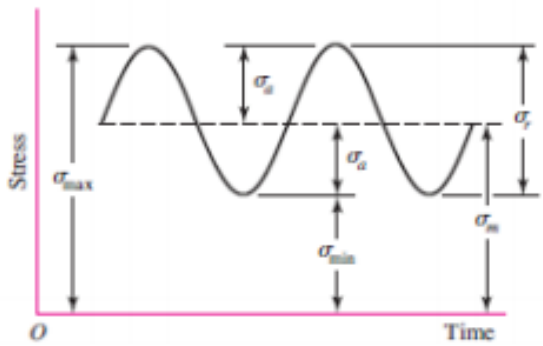

Where the components of the effort are:

$$\sigma_{máx} = Maximun\ effort\ component$$

$$\sigma_{mín} = Minimun\ effort\ component$$

$$\sigma_a = Component\ of\ the\ amplitude$$

$$\sigma_m = Medium\ effort\ component$$

$$\sigma_r = Ramge\ of\ effort$$

- **<u>SENSITIVITY ANALYSIS</u>**

MODULES AND FUNCTIONS FOR THE DESIGN OF THE ELEVATOR

The following modules were then proposed for the sensitivity analysis for the project, in the following table:

MODULE	FUNCTIONS
1. **Control System**	This module allows maneuvering the elevator car and perform functions such as entering and exiting the cabin, raising and lowering the cabin and finely activate the elevator.
2.**Mechanical System**	This module allows to transmit the necessary power to all the elements of the system for the displacement of the elevator.
3.**Estructural System**	This module allows the mechanical system to be coupled with the control system.

STABILITY ANALYSIS

LIFT DESIGN

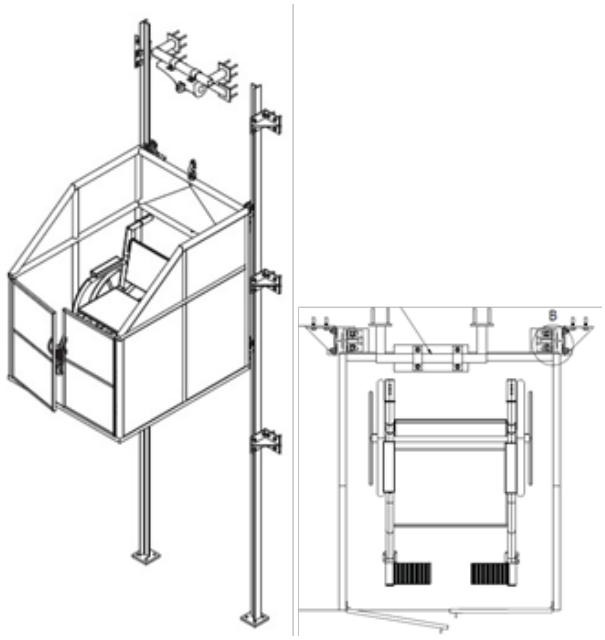

➢ COMPATIBILITY ANALYSIS

1. Well
2. From the engine room
3. From the access doors
4. From the cabins
5. Cables
6. Stopping the cockpit
7. Of the counterweights
8. Speed limiters
9. From the Guides
10. Of the shock absorbers
11. Of the displacements (stroke) of the shock absorbers
12. The emergency drive
13. Electrical installations
14. Capacities

CONCLUSIONS

Installation of elevators for the disabled

There are many types of disabled lifts, such as lift platforms, ramps, or stair lift chairs that are installed on railings of buildings, or lifts adapted for this purpose.

Disabled elevators are a good option for wheelchair users, but if you do not have enough space, you can choose to install a stair lift.

Stairlifts require less space, so if they are to be installed in a particular house, they are the ideal installation, since they are also easier to install.

There are a variety of stair lifts, whether they are installations such as the platform or the chair, or laptops like the stairwell caterpillar.

Stairlifts require less space, so if they are to be installed in a particular house, they are the ideal installation, since they are also easier to install.

There are a variety of stair lifts, whether they are installations such as the platform or chair, or laptops like the stairwell caterpillar.

Lift platforms for disabled people

The elevators are a great help for the handicapped, since they help them a great deal to carry out their daily tasks.

There are disabled lifts for stairs, where they are installed next to the wall of the building, so there is a special space to put a chair to climb the disabled, and the other part of the staircase leaves a free space to be able to climb to foot.

Wheelchair lifts are a great help for the disabled as they help avoid stairs and are very easy to install.

In addition, these chairs come with systems of protection for greater security, although it is a very safe system.

This is one of the types of elevator for the disabled and can be installed anywhere.

REFERENCES

- NASSIR SAPAG CHAIN. Fundamentals Preparation and Evaluation of Projects.
- UNITED NATIONS. Manual of Economic Development Projects.
- F. CARVAJAL D.A. Elements of Investment Projects.
- Spanish Office of Science and Technology: http // www.sost.es./index.htm

ANNEXES
Selection Matrix
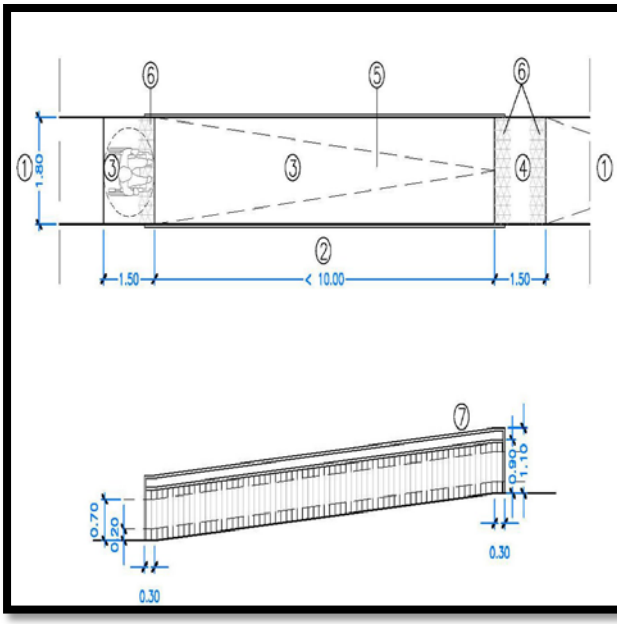
"Implementation of Ramps and Elevators"